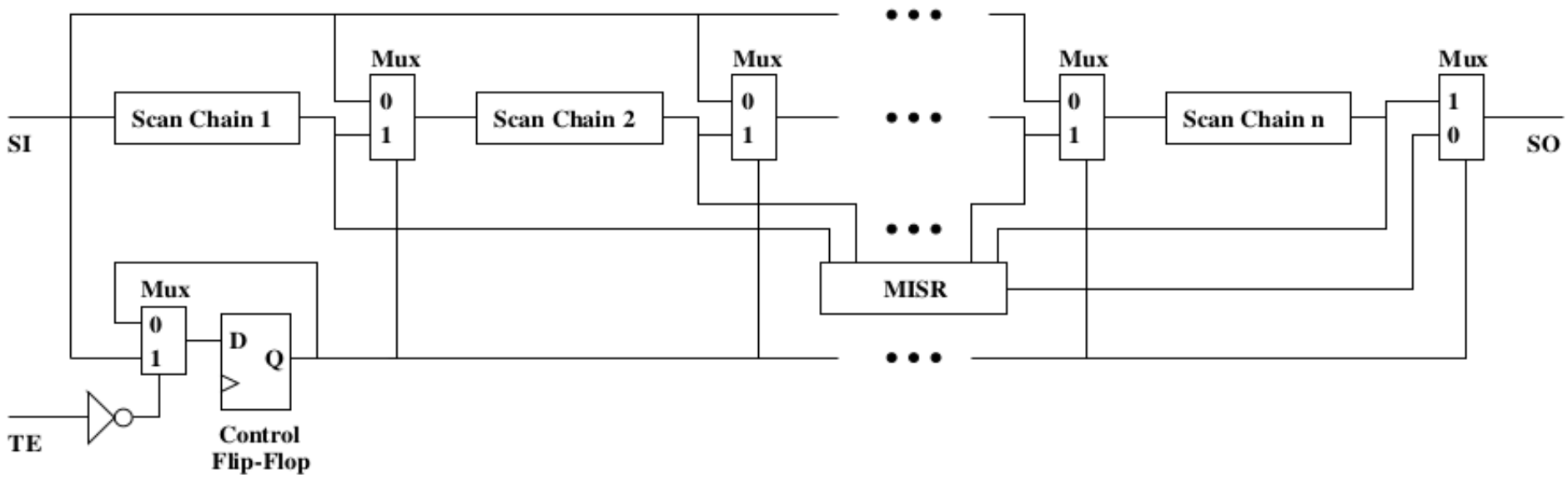
SI
Scan Chain 1
Mux
0
1
Scan Chain 2
Mux
0
1
Mux
0
1
Scan Chain n
Mux
1
0
SO
MISR
Mux
0
1
D
Q
TE
Control
Flip-Flop